Communication Systems Lecture-16: Superheterodyne Receivers and PLLs

Chadi Abou-Rjeily

Department of Electrical and Computer Engineering
Lebanese American University
chadi.abourjeily@lau.edu.lb

November 19, 2024

Superheterodyne Receivers (1)

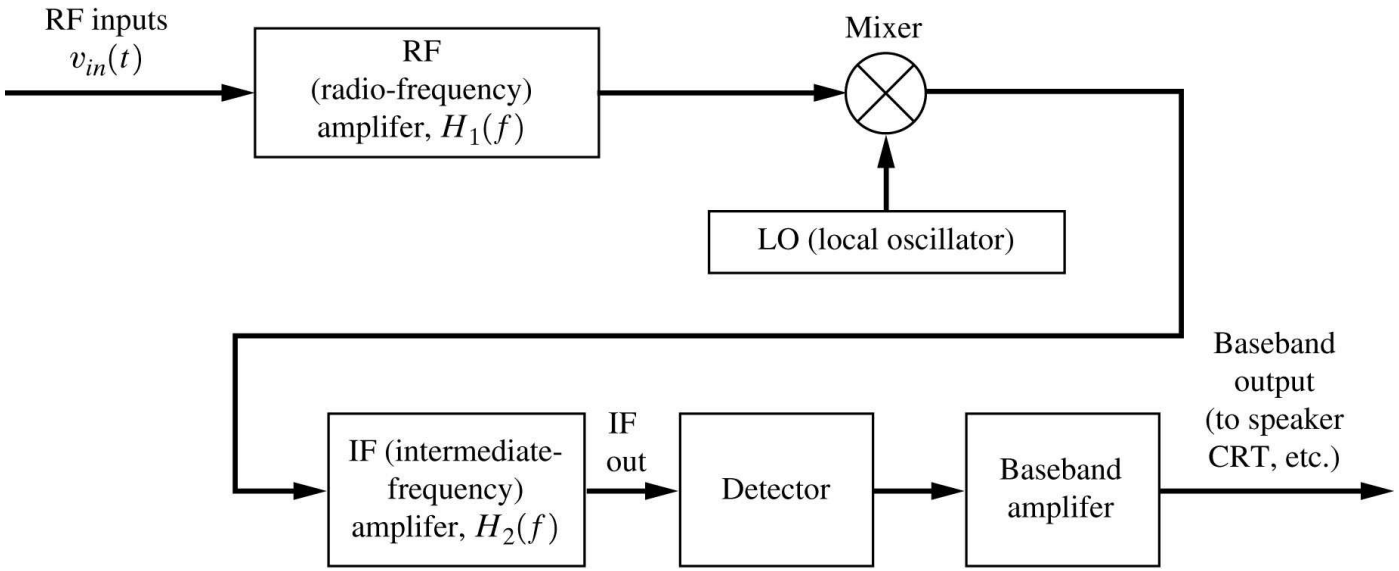

- The local oscillator is used to down-convert the input signal to some convenient frequency band called the Intermediate-Frequency (IF) band.
- The RF amplifier filter passes and amplifies the desired signal. The RF filter also provides some rejection of adjacent channel signals, but the main adjacent channel rejection is accomplished by the IF filter.
- An appropriate detector is used to extract the information (for example, envelope detector for AM ...).

Superheterodyne Receivers (2)

Superheterodyne receivers are appealing because of the following advantages:

- High sensitivity: ability to detect weak signals.
- High selectivity: ability to separate closely spaced signals.

The above advantages follow from the fact that it's much easier to construct highly frequency-selective filters in the IF band (compared to the RF band). In other words, filters in the IF band have steeper frequency responses resulting in a better adjacent channel rejection.

Superheterodyne Receivers (3)

- Consider the case where the input to the receiver is an AM signal having a carrier frequency of f_c:

$$s(t) = m(t)\cos[\omega_c t]$$

where $m(t)$ is the modulating signal.

- Consider the signal of an adjacent channel that has a carrier frequency of $f_c + 2f_{IF}$:

$$s_1(t) = m_1(t)\cos[(\omega_c + 2\omega_{IF})t]$$

where $m_1(t)$ is the modulating signal of the adjacent channel.

- Assume, also, that the frequency of the local oscillator is chosen as:

$$f_{LO} = f_c + f_{IF}$$

Superheterodyne Receivers (4)

- The signal at the output of the mixer is given by:

$$
\begin{aligned}
v_1(t) &= [s(t) + s_1(t)] \cos[(\omega_c + \omega_{IF})t] \\
&= m(t) \cos[\omega_c t] \cos[(\omega_c + \omega_{IF})t] \\
&\qquad + m_1(t) \cos[(\omega_c + 2\omega_{IF})t] \cos[(\omega_c + \omega_{IF})t] \\
&= \frac{1}{2} m(t) \cos[\omega_{IF} t] + \frac{1}{2} m(t) \cos[(2\omega_c + \omega_{IF})t] \\
&\qquad + \frac{1}{2} m_1(t) \cos[\omega_{IF} t] + \frac{1}{2} m_1(t) \cos[(2\omega_c + 3\omega_{IF})t]
\end{aligned}
$$

- The signal at the output of the IF bandpass filter is:

$$
v_2(t) = \frac{1}{2} m(t) \cos[\omega_{IF} t] + \frac{1}{2} m_1(t) \cos[\omega_{IF} t]
$$

- In other words, the adjacent channel (at $f_c + 2f_{IF}$) will interfere with the channel at f_c.
- The frequency $f_c + 2f_{IF}$ is called the image frequency.

Superheterodyne Receivers (5)

- Image Response: is the reception of an unwanted signal located at the image frequency due to insufficient attenuation of the image signal by the RF amplifier filter.

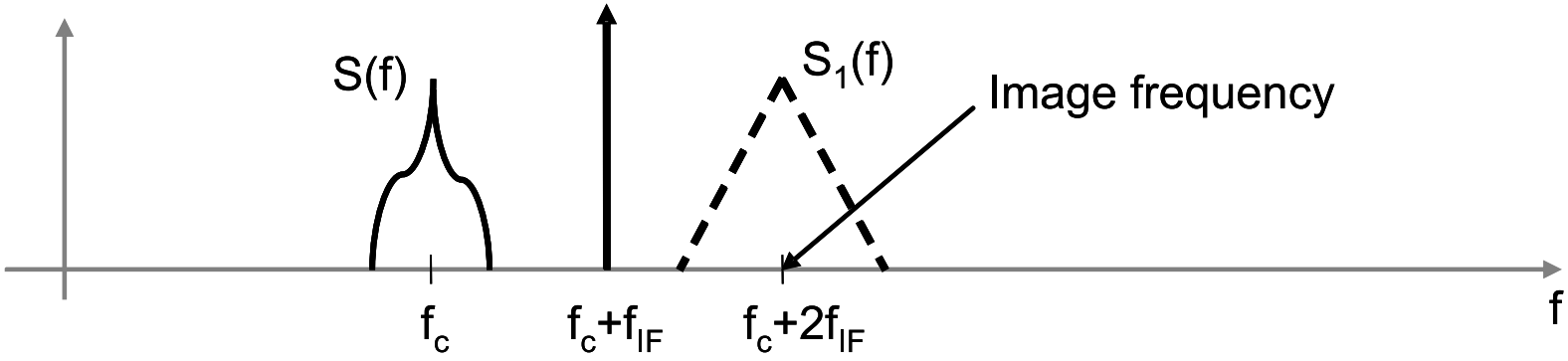

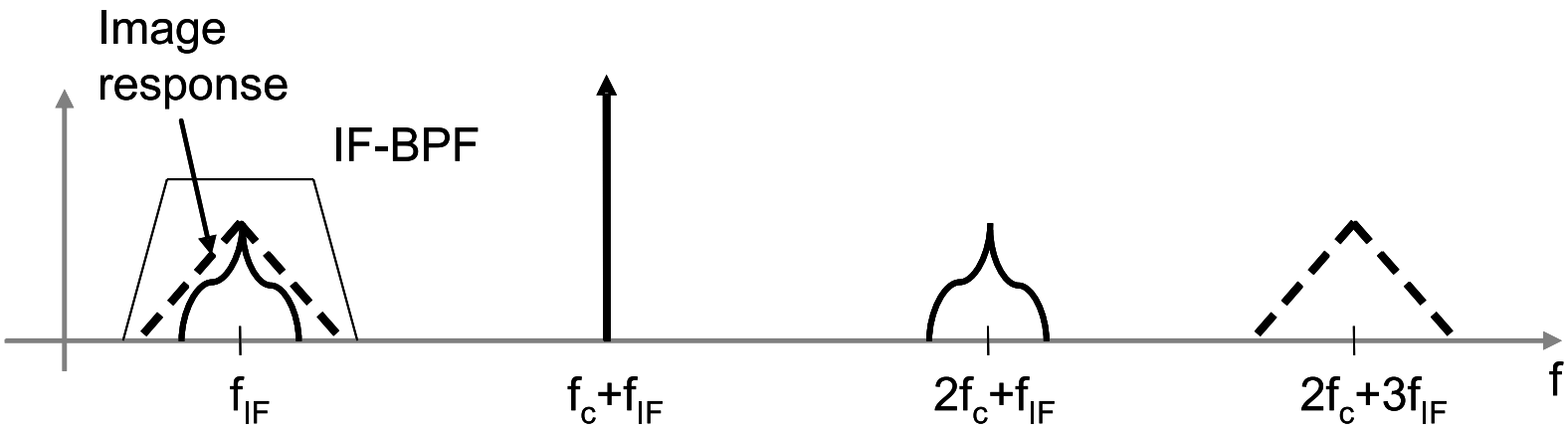

Superheterodyne Receivers (6)

- Usually, the signal at the image frequency is small compared to the signal of the desired channel because the former is attenuated by the RF-BPF (band-pass filter).

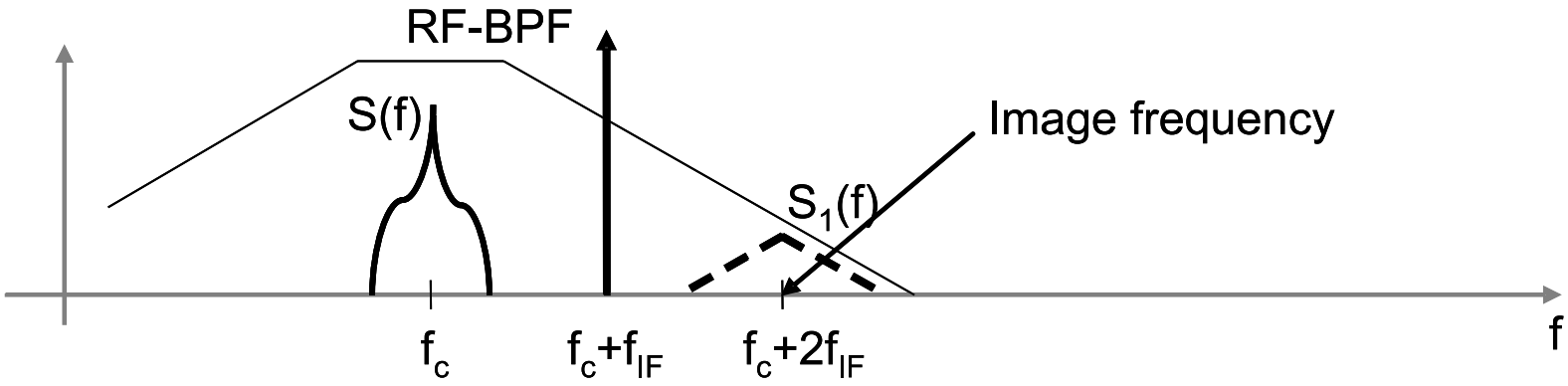

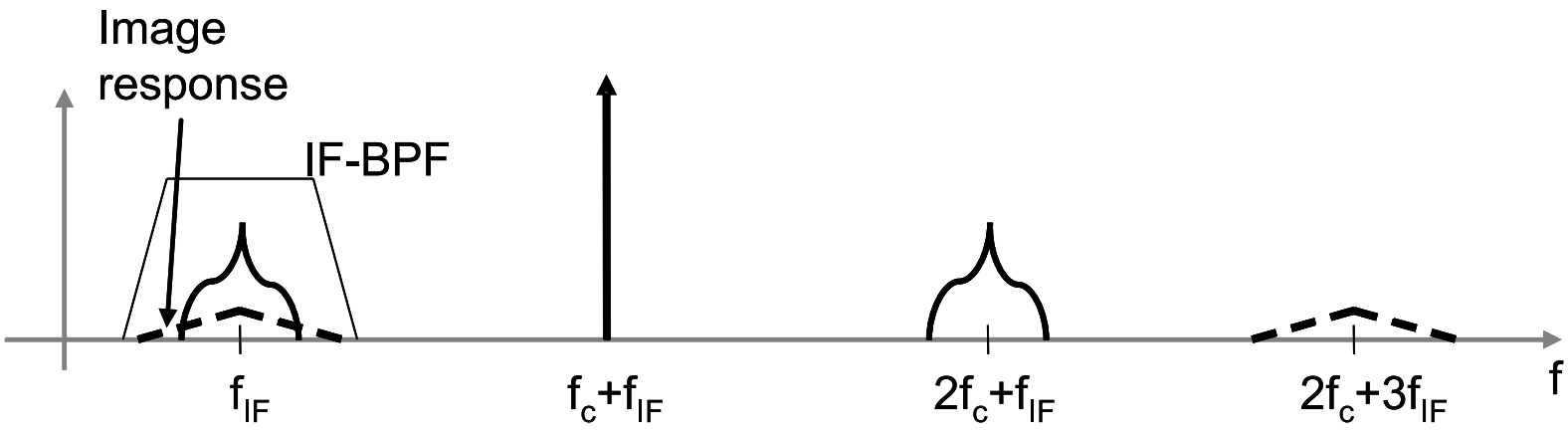

Superheterodyne Receivers (7)

- Example: A typical value for the IF frequency with AM broadcast radios is $f_{IF} = 455$ kHz.
- To receive a station at 850 kHz, the frequency of the local oscillator must be tuned at:
  $f_{LO} = f_c + f_{IF} = 850 + 455 = 1305$ kHz.
- In this case, the image frequency is at $f_c + 2f_{IF} = 1760$ kHz.
- In other words, if the used RF-BPF is not selective enough, the station at 1760 kHz will interfere with the station at 850 kHz.

Superheterodyne Receivers (8)

- In the following figure: $H_1(f)$ stands for the frequency response of the RF-BPF. $V_{in}(f)$ and $V_{LO}(f)$ stand for the spectra of the input signal and the signal at the output of the local oscillator respectively.

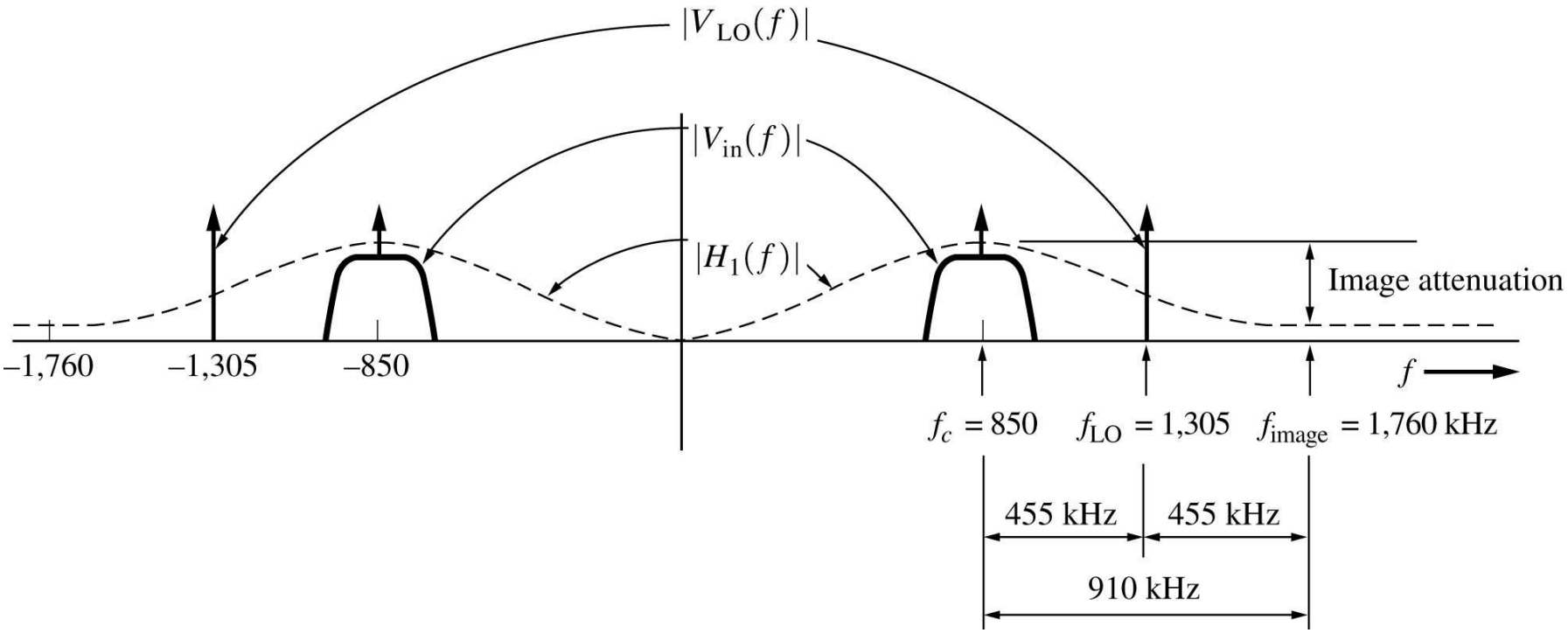

Superheterodyne Receivers (9)

- From the last figure, it can be seen that the intermediate frequency f_{IF} must be high enough so that the image response at the receiver is acceptably small.
- On the other hand, the value f_{IF} must be low enough so that highly frequency-selective band-pass filters can be designed in the IF band.
- In other words, a compromise must be made on the value of f_{IF}.
- For example, $f_{IF} = 455$ kHz for AM broadcast radios and $f_{IF} = 10.7$ MHz for FM broadcast radios.

PLLs (1)

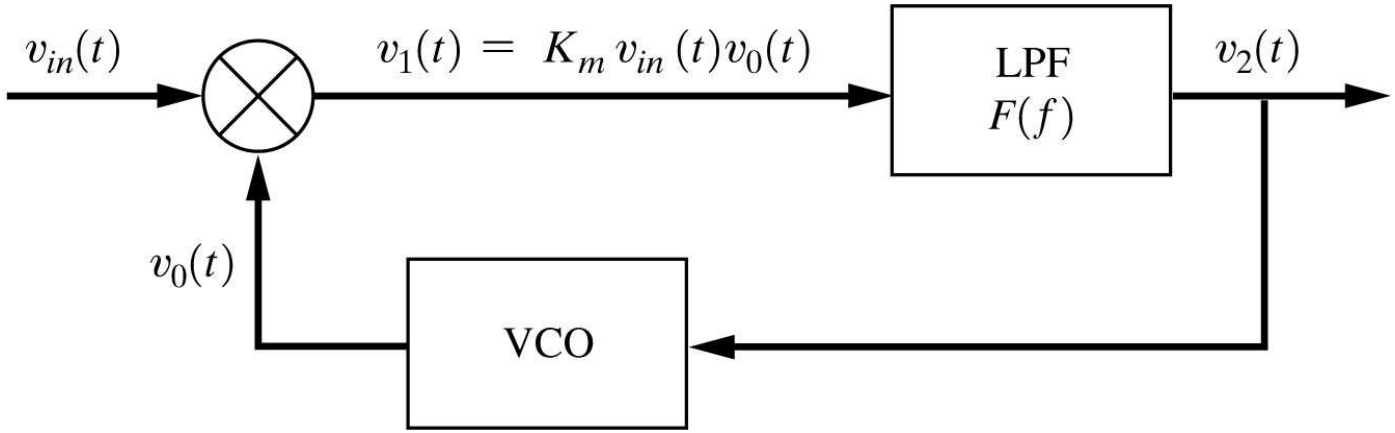

- In digital and analog receivers, Phase Locked Loops (PLL) are used to track the phase of an incoming passband signal.
- PLLs can also act like FM demodulators.
- PLLs consist of a multiplier, a lowpass filter and a Voltage-Controlled-Oscillator (VCO).
  - The oscillating frequency and phase at the output of the VCO vary as a function of the applied voltage ($v_2(t)$).

PLLs (2)

- Assume that the input signal is:

$$v_{in}(t) = A_i \sin\left[\omega_o t + \theta_i(t)\right]$$

- The signal at the output of the VCO can be written as:

$$v_o(t) = A_o \cos\left[\omega_o t + \theta_o(t)\right]$$

where:

$$\theta_o(t) = K_v \int_{-\infty}^{t} v_2(\tau)\mathrm{d}\tau$$

and K_v is the VCO gain constant.

- The signal at the output of the multiplier is:

$$\begin{aligned} v_1(t) &= K_m v_{in}(t) v_o(t) \\ &= K_m A_i A_o \sin\left[\omega_o t + \theta_i(t)\right] \cos\left[\omega_o t + \theta_o(t)\right] \\ &= \frac{K_m A_i A_o}{2} \sin\left[\theta_i(t) - \theta_o(t)\right] + \frac{K_m A_i A_o}{2} \sin\left[2\omega_o t + \theta_i(t) + \theta_o(t)\right] \end{aligned}$$

where K_m is the gain of the multiplier circuit.

PLLs (3)

- Designate by $f(t)$ the impulse response of the lowpass filter (LPF). The second term of the last equation (having a frequency $2f_o$) does not pass through the filter. Consequently, the output of the LPF is:

$$\begin{aligned} v_2(t) &= \frac{K_m A_i A_o}{2} \sin\left[\theta_i(t) - \theta_o(t)\right] * f(t) \\ &= K_d \left[\sin \theta_e(t)\right] * f(t) \end{aligned}$$

where $K_d \triangleq \frac{K_m A_i A_o}{2}$ and $\theta_e(t)$ is the phase error:

$$\theta_e(t) \triangleq \theta_i(t) - \theta_o(t)$$

- Recall that $\theta_o(t) = K_v \int_{-\infty}^{t} v_2(\tau) \mathrm{d}\tau$. Differentiating $\theta_e(t)$:

$$\begin{aligned} \frac{\mathrm{d}\theta_e(t)}{\mathrm{d}t} &= \frac{\mathrm{d}\theta_i(t)}{\mathrm{d}t} - K_v v_2(t) \\ &= \frac{\mathrm{d}\theta_i(t)}{\mathrm{d}t} - K_v K_d \left[\sin \theta_e(t)\right] * f(t) \end{aligned}$$

PLLs (4)

- The last equation can be written as:

$$\frac{\mathrm{d}\theta_e(t)}{\mathrm{d}t} = \frac{\mathrm{d}\theta_i(t)}{\mathrm{d}t} - K_t\left[\sin\theta_e(t)\right] * f(t)$$

  where $K_t = K_v K_d = \frac{K_v K_m A_i A_o}{2}$. K_t can be made arbitrarily large by increasing K_v or K_m.

- Let the frequency response $F(f) = \mathcal{F}\left[f(t)\right]$ of the LPF be flat within the band of $\sin\theta_e(t)$, then:

$$\frac{\mathrm{d}\theta_e(t)}{\mathrm{d}t} = \frac{\mathrm{d}\theta_i(t)}{\mathrm{d}t} - K_t \sin\theta_e(t)$$

- Let the information be a step function such that: $\frac{\mathrm{d}\theta_i(t)}{\mathrm{d}t} = \Delta\omega > 0$ for $t \geq 0$. In this case:

$$\frac{\mathrm{d}\theta_e(t)}{\mathrm{d}t} = \Delta\omega - K_t \sin\theta_e(t)$$

PLLs (5)

- Suppose that K_t is chosen to be sufficiently large so that $K_t > \Delta\omega$:
  - For $\theta_e(t) = 0$: $\frac{d\theta_e(t)}{dt} = \Delta\omega$.
  - For $\theta_e(t) = \pi/2$: $\frac{d\theta_e(t)}{dt} = \Delta\omega - K_t < 0$.

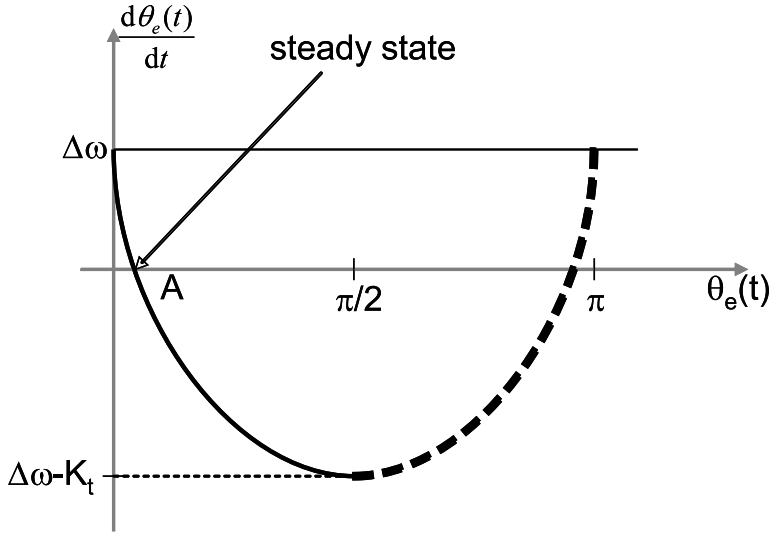

- The steady state is reached when $\frac{d\theta_e(t)}{dt} = 0$ resulting in:

$$\theta_{ss} = [\theta_e(t)]_{\frac{d\theta_e(t)}{dt}=0} = \sin^{-1}\left(\frac{\Delta\omega}{K_t}\right)$$

- For $K_t >> \Delta\omega$, $\theta_{ss} \approx 0$ and the PLL is locked to the phase of the incoming signal.

PLLs (6)

- Note that $\theta_e(t)$ is small and the point A in the previous figure corresponds to the steady state.
- If the PLL is at steady state and $\theta_e(t)$ increases. From the last figure, this implies that $\frac{\mathrm{d}\theta_e(t)}{\mathrm{d}t}$ will become negative. In other words, $\theta_e(t)$ will decrease and the PLL will go back to the steady state.
- If the PLL is at steady state and $\theta_e(t)$ decreases. From the last figure, this implies that $\frac{\mathrm{d}\theta_e(t)}{\mathrm{d}t}$ will become positive. In other words, $\theta_e(t)$ will increase and the PLL will go back to the steady state.

PLLs (7)

- Suppose that the input signal is a FM signal:

$$\frac{\mathrm{d}\theta_i(t)}{\mathrm{d}t} \;\; \alpha \;\; m(t)$$

where $m(t)$ is the modulating information signal.

- At steady state:

$$\frac{\mathrm{d}\theta_e(t)}{\mathrm{d}t} = \frac{\mathrm{d}\theta_i(t)}{\mathrm{d}t} - \frac{\mathrm{d}\theta_o(t)}{\mathrm{d}t} = 0$$
$$\Rightarrow \;\; \frac{\mathrm{d}\theta_o(t)}{\mathrm{d}t} = \frac{\mathrm{d}\theta_i(t)}{\mathrm{d}t} \;\; \alpha \;\; m(t)$$

- On the other hand, given that $\frac{\mathrm{d}\theta_o(t)}{\mathrm{d}t}$ is proportional to $v_2(t)$ (the output signal), then $v_2(t)$ will be proportional to $m(t)$.
- In other words, the PLL acts like a frequency demodulator.

PLLs (8)

- The PLL differential equation is difficult to solve. However, this relation can be simplified if the gain K_t is large so that the PLL is locked and the phase error $\theta_e(t)$ is small. In this case, $\sin\theta_e(t) \approx \theta_e(t)$ and:

$$\frac{\mathrm{d}\theta_e(t)}{\mathrm{d}t} = \frac{\mathrm{d}\theta_i(t)}{\mathrm{d}t} - K_t\theta_e(t) * f(t)$$

- Calculating the Fourier transform of the last equation results in:

$$j2\pi f\Theta_e(f) = j2\pi f\Theta_i(f) - K_t\Theta_e(f)F(f)$$

- The last equation implies that:

$$\Theta_e(f) = \Theta_i(f) - \frac{K_t}{j2\pi f}F(f)\Theta_e(f)$$

$$\Rightarrow \quad \Theta_e(f) = \Theta_i(f) - K_d\frac{K_v}{j2\pi f}F(f)\Theta_e(f)$$

PLLs (9)

- A block diagram based on the last equation is shown in the next figure.

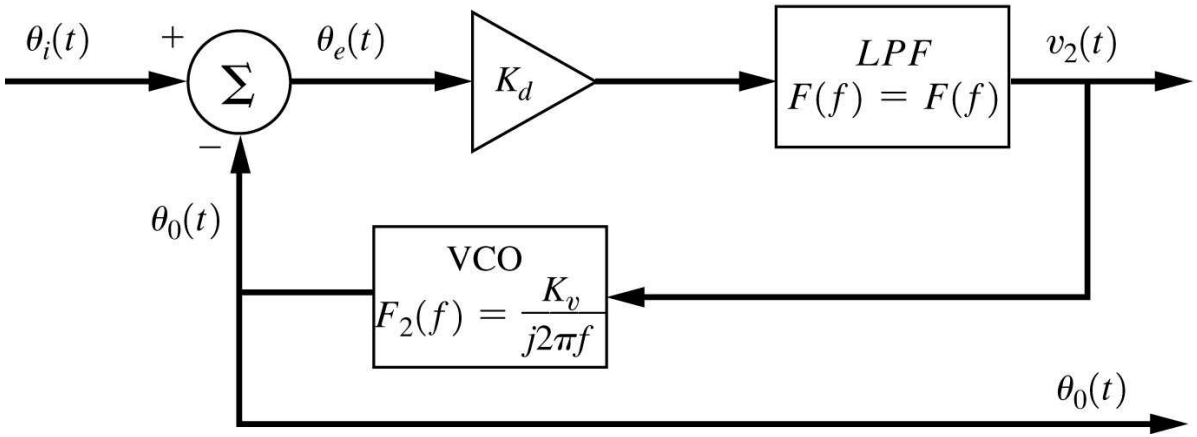

- The transfer function can be calculated from:

$$\Theta_o(f) = \frac{K_v}{j2\pi f} V_2(f)$$

$$= \frac{K_v}{j2\pi f} K_d F(f) \left[\Theta_i(f) - \Theta_o(f)\right]$$

$$\Rightarrow H(f) = \frac{\Theta_o(f)}{\Theta_i(f)} = \frac{\frac{K_v K_d}{j2\pi f} F(f)}{1 + \frac{K_v K_d}{j2\pi f} F(f)} = \frac{K_v K_d F(f)}{j2\pi f + K_v K_d F(f)}$$